PLOT AREA	=	10306.120	SQ MT
PERMISSIBLE FAR 2.75	=	28341.830	SQ MT.
PERMISSIBLE GROUND COVERAGE 35 %	=	3607.142	SQ MT.
PERMISSIBLE DENSITY(-50%+5%)	=	1650 PPH. (825PPH TO 1732.50PPH)	
PROPOSED FAR	=	28146.194	SQ MT.
PROPOSED GROUND COVERAGE (20.79 %)	=	2142.375	SQ MT.
PROPOSED DENSITY	=	1397 PPH.	
PERM. ANCILLARY AREA	=	28341.830 x 0.15 = 4251.274 SQ MT (15% OF FAR AREA)	
PROPOSED ANCILLARY AREA	=	4152.749	SQ MT.
PERM. COMMERCIAL AREA (1 % OF FAR)	=	283.418	SQ MT.

PROPOSED COMMERCIAL AREA

PROPOSED COMMERCIAL AREA IN TOWER - E = 283.285 SQ MT. REFF. SHEET - 12

PARKING DETAILS

PARKING REQUIRED = $\frac{F.A.R}{80}$ = 28341.830/80

= 354.272 = 355 ECS

PARKING IN UPPER BASEMENT

TOTAL BASEMENT AREA FOR PARKING

= 7557.163 - (326.400+234.812+164.995)

= 7557.163 - 726.207 = 6830.956 SQ MT.

= 6830.956 / 30 = 227.699 = SAY 227 ECS

PARKING IN LOWER BASEMENT

TOTAL BASEMENT AREA FOR PARKING

= 7557.163 - (326.400+135.172+164.995)

= 7557.163 - 626.567 = 6930.596 SQ MT.

= 6930.596 / 30 = 231.020 = SAY 231 ECS

PARKING IN STILT

TOTAL AREA PROVIDED FOR STILT PARKING = 206.840 SQ MT.

ECS IN STILT AREA = 206.840/30 = 6.894 SAY 6 ECS

TOTAL PARKING PROVIDED

TOTAL ECS PROVIDED = 227 + 231 +6 = 464 ECS

GREEN AREA DETAIL

REQUIRED SOFT GREEN AREA= 25% OF OPEN AREA

OPEN AREA = PLOT AREA - GROUND COVERAGE = 10306.120 - 2142.375 = 8163.745 SQ MT.

HENCE SOFT GREEN AREA REQUIRED = $\frac{8163.745 \times 25}{100}$ = 2040.936 SQ MT.

GREEN AREA PROVIDED

GREEN AREA PROVIDED = 3515.126 SQ MT. REFF. SHEET - 03

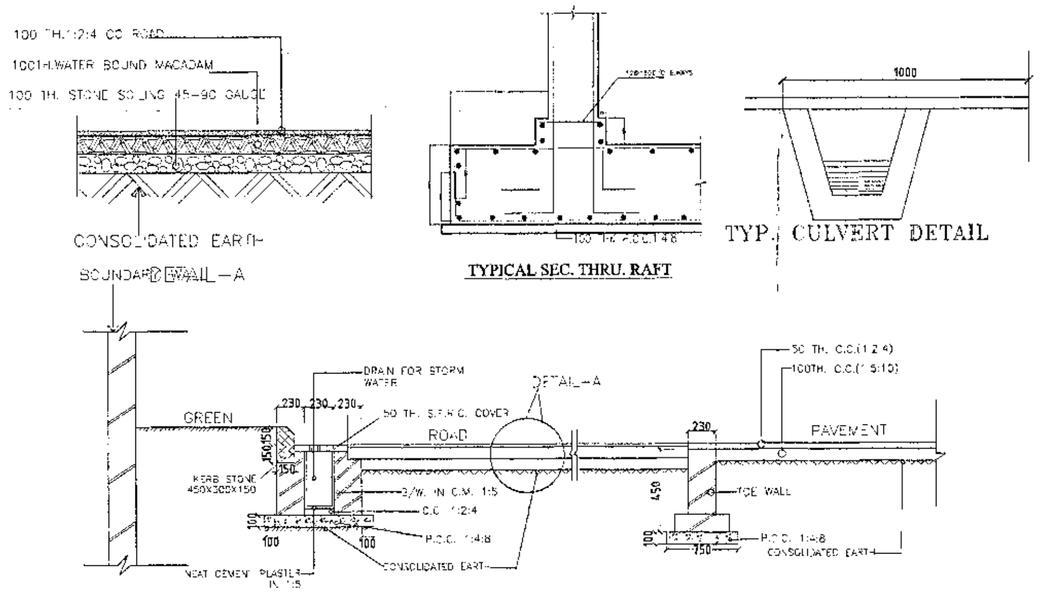

Plot area						10306.12	Sqm.
FAR (Type 2.75)						28341.83	Sqm.
Permissible density (-50%/+5%)(825PPH TO 1732.50 PPH)						1650	PPH
Total population achieved		288	Nos. X 5			1440	Nos.
Hence density achieved		1440	X 10000 /	10306.12		1397.00	PPH

TOTAL FAR, GROUND COVERAGE & NON FAR DETAILS

	Height	FAR AREA	Ground Coverage	STILT NON FAR	Total NON FAR area	Total Ancillary area	Nos. of units
Tower A	G/S + 16	6077.721	397.707	85.368	85.368	659.175	67
Tower B	G + 14	3715.470	282.582	0.000	0.000	585.852	30
Tower C	G/Community+19	9270.754	701.206	0.000	0.000	877.230	97
Tower D	G + 14	3715.470	282.582	0.000	0.000	585.852	30
Tower E	G/Commercial +16	5366.779	463.298	121.472	121.472	729.666	64
S.T.P						329.990	
Watchmen Shelter			15.000			15.000	
U.G tank / Pump Room						369.984	
Total		**28146.194**	**2142.375**	**206.840**	**206.840**	**4152.749**	**288**
Upper Basement					7557.163		
Lower Basement					7557.163		
Grand Total		**28146.194**	**2142.375**	**206.840**	**15321.166**	**4152.749**	**288**
			20.79%				

AREA DETAILS FOR HOUSING AT PLOT NO- GH-01/C SECTOR 143B, AT EXPRESSWAY NOIDA. FOR - M/S G.S.S. Procon PVT. LTD.

	Tower A	Tower B	Tower C	Tower D	Tower E	Total FAR	Total NON FAR area	Total (Ancillary) area	No. of units
Upper Basement							7557.163		
Lower Basement							7557.163		
Ground Floor	287.961	256.798	673.387	256.798	320.443	1795.387	206.840	125.148	9
First Floor	361.860	247.048	452.493	247.048	315.396	1623.845		189.066	17
Second Floor	361.860	247.048	452.493	247.048	315.396	1623.845		189.066	17
Third Floor	361.860	247.048	452.493	247.048	315.396	1623.845		189.066	17
Fourth Floor	361.860	247.048	452.493	247.048	315.396	1623.845		189.066	17
Fifth Floor	361.860	247.048	452.493	247.048	315.396	1623.845		189.066	17
Sixth Floor	361.860	247.048	452.493	247.048	315.396	1623.845		189.066	17
Seventh Floor	361.860	247.048	452.493	247.048	315.396	1623.845		189.066	17
Eighth Floor	361.860	247.048	452.493	247.048	315.396	1623.845		189.066	17
Ninth Floor	361.860	247.048	452.493	247.048	315.396	1623.845		189.066	17
Tenth Floor	361.860	247.048	452.493	247.048	315.396	1623.845		189.066	17
Eleventh Floor	361.860	247.048	452.493	247.048	315.396	1623.845		189.066	17
Twelfth Floor	361.860	247.048	452.493	247.048	315.396	1623.845		189.066	17
Thirteenth Floor	361.860	247.048	452.493	247.048	315.396	1623.845		189.066	17
Fourteenth Floor	361.860	247.048	452.493	247.048	315.396	1623.845		189.066	17
Fifteenth Floor	361.860		452.493		315.396	1129.749		117.998	13
Sixteenth Floor	361.860		452.493		315.396	1129.749		117.998	13
Seventeenth Floor			452.493			452.493		41.766	5
Eighteenth Floor			452.493			452.493		41.766	5
Ninteenth Floor			452.493			452.493		41.766	5
S.T.P								329.990	
Watchmen Shelter								15.000	
U.G tank / Pump								369.984	
M/R, mumty								304.409	
	6077.721	**3715.470**	**9270.754**	**3715.470**	**5366.779**	**28146.194**	**15321.166**	**4152.749**	**288**

(AREA CHART) S-02

[REVISED PLAN]

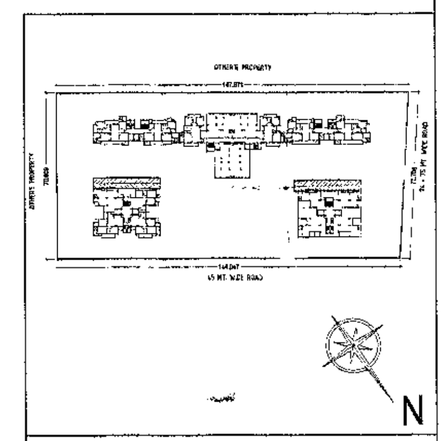

PROJECT TITLE

REVISED GROUP HOUSING AT
PLOT NO- GH-01/C SECTOR 143B ,
AT EXPRESSWAY NOIDA.
FOR - M/S G.S.S. Procon PVT. LTD.

DRAWING TITLE:-

AREA CHART

S-02

DRG NO.

SCALE	1:100
DATE	
DEALT	
JOB NO.	\\Server\D\DATA\VECTOR\\SUBMISSION\20100430 SUBMISSION\20100820 LAYOUT.

DEEPAK MEHTA & ASSOCIATES
ARCHITECTS, PLANNERS, VALUERS, LANDSCAPE & INTERIORS
PLOT NO. 16 ABHISHEK PLAZA L.S.C. MAYUR VIHAR PH II DELHI 91
PH: 65272180 TELEFAX: 22770180

Architect Deepak Mehta
CO A/0871/1990
Plot No. 16, Abhishek Plaza
L.S.C. Mayur Vihar Ph. II, Delhi - 91
ARCHITECT'S SIGN

For GSS PROCON PRIVATE LIMITED
Director
OWNER'S SIGN

भवन प्रकोष्ठ
अनापत्ति
निर्देश-आवंटी, आवंटन एवं पट्टा प्रलेख की शर्तों को पूर्णतया पालन करने हेतु बाध्य है।
स्वीकृति
पत्र संख्या नोएडा/ग.प्र. ग्रे.नो.आ.
दिनांक
विभाग

Map for proposed Building is as per Bye Laws. Sanctioned
Asstt. Architect

नक्शे के अग्र पृष्ठ एवं साइड बैक सैट में अतिक्रमण करने पर भारी सौधानीजन शुल्क देना पड़ता है तथा अग्रिम अतिक्रमण को तोड़ना भी पड़ सकता है। अतः स्वीकृत मानचित्र के अनुसार ही निर्माण करें, अतिक्रमण न करें।

Encroachments on front, Rear & Side setbacks invite heavy penalties. Encroachments could be demolished also Please avoid encroachments construct building as per Sanctioned Map.

भवन प्रकोष्ठ
नोट: 1. यह मानचित्र स्वीकृति की दिनांक से अधिक हम 5 वर्ष की अवधि तक मैप रहेगा यदि भूखण्ड का पट्टे के अधिकार उपलब्ध हो अथवा किसी पूर्व अंतिम करा लिए हो। पट्टे के अधिकार उपलब्ध पुनर्नवीनीकरण न होने की दशा में मानचित्र स्वतः पट्टे की अवधि समाप्त होने से समाप्त समझे।

(2) आवंटी को अधिभोग प्रमाण पत्र हेतु आवेदन करते समय विकास प्रबन्धक (आगमन) से नियम अनुसार समय वृद्धिपत्र प्राप्तकर प्रस्तुत करना होगा