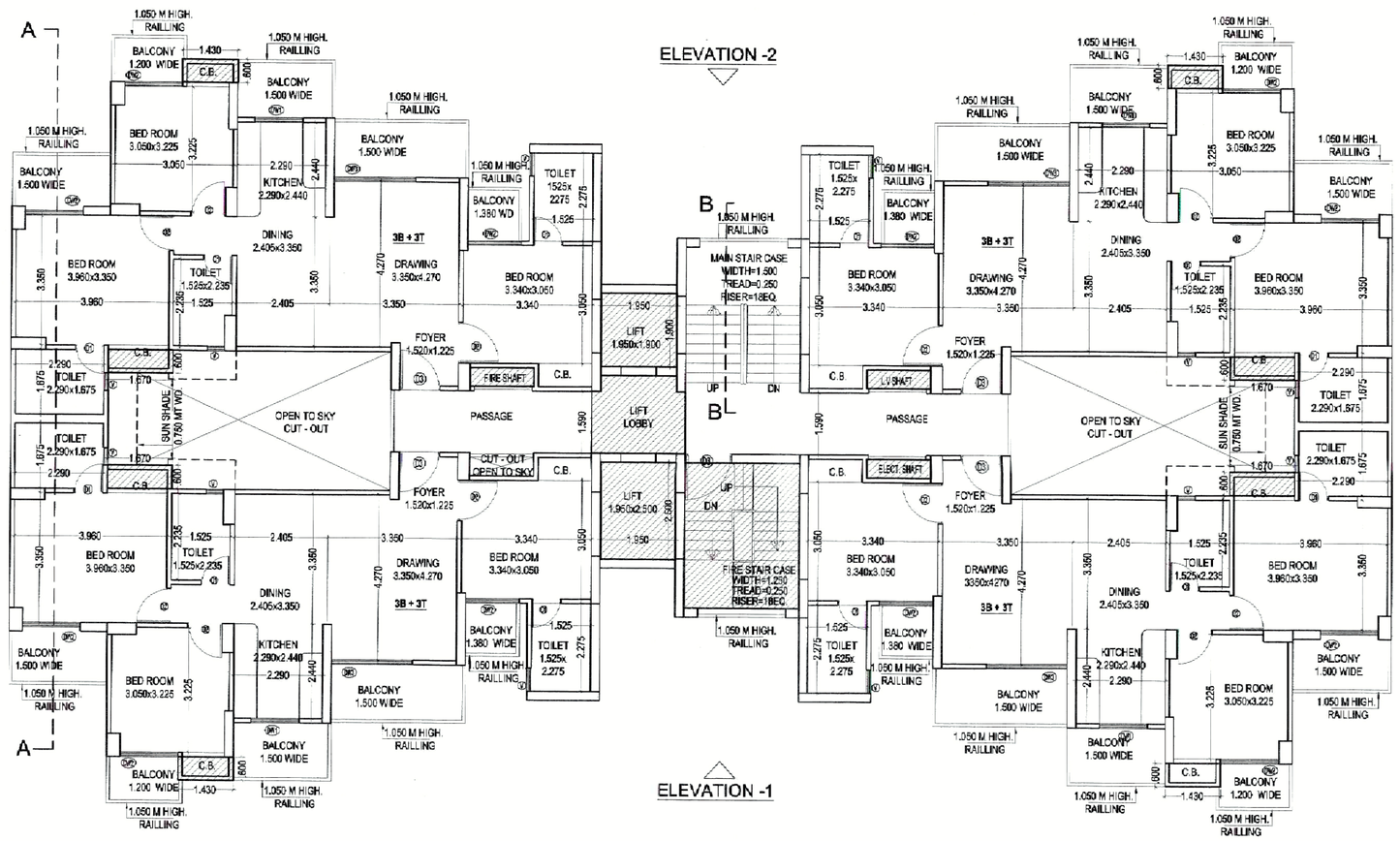

TYPICAL FLOOR PLAN (2nd to 15th)

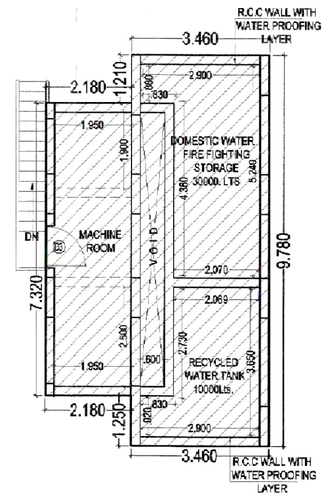

MACHINE ROOM & OVER HEAD WATER TANK

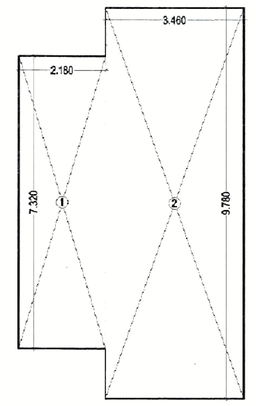

O.H.T & MACHINE ROOM AREA DIAGRAM
(ANCILLARY AREA)

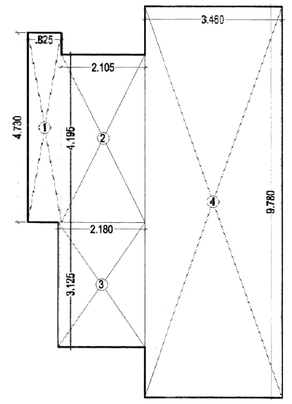

MUMTY AREA DIAGRAM
(ANCILLARY AREA)

MUMTY					
SNO.	WIDTH		LENGTH		AREA(SQM)
1	0.825	x	4.730	=	3.902
2	2.105	x	4.195	=	8.830
3	2.180	x	3.125	=	6.813
4	3.460	x	9.780	=	33.839
TOTAL				=	53.384

O.H.T & MACHINE ROOM					
SNO.	WIDTH		LENGTH		AREA(SQM)
1	2.180	x	7.320	=	15.958
2	3.460	x	9.780	=	33.839
TOTAL				=	49.796

MUMTY	=	53.384
O.H.T & MACHINE ROOM	=	49.796
TOTAL	=	103.181

(TOWER- G,H,I & J) S-11

TYPICAL FLOOR & AREA CHART

DOORS & WINDOWS SCHEDULE

S.NO.	TYPE	SIZE	SILL	LLVL.
1	D1	0.750x2.100	±0.0	2.100
2	D2	0.900x2.100	±0.0	2.100
3	D3	1.050x2.100	±0.0	2.100
4	DW1	1.200x2.450	±0.0/0.450	2.450
5	DW2	1.600x2.450	±0.0/0.450	2.450
6	DW3	1.800x2.450	±0.0/0.450	2.450
7	DW4	2.000x2.450	±0.0/0.450	2.450
8	W1	0.450x1.400	+1.050	2.450
9	W2	0.600x1.400	+1.050	2.450
10	W3	1.195x1.400	+1.050	2.450
11	W4	1.800x2.000	+0.450	2.450
12	W5	1.200x2.000	+0.450	2.450
13	W6	1.175x2.000	+0.450	2.450
14	V	0.600x1.400	+1.050	2.450

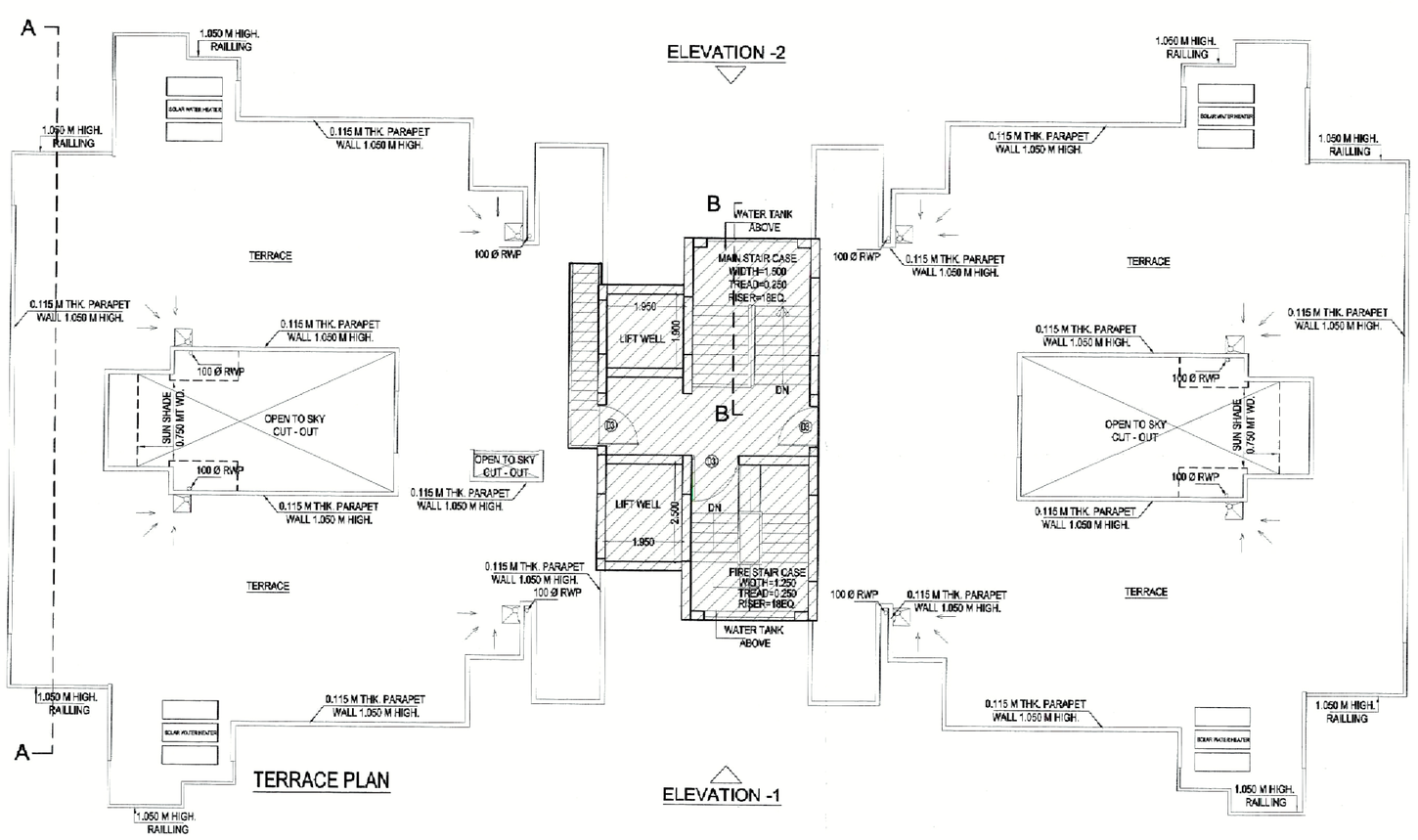

TERRACE PLAN

TOWER G / H / I / J

	3B + 3T	3B + 3T	3B + 3T	3B + 3T	Circulation / Core area	Total FAR	Cupboard Area (Ancillary area)	Ground Coverage	Fire stair (Ancillary area)	Stilt (Non FAR)	M/R, mumty (Ancillary area)	FIRE.L.V.& ELE.SHAFTS (Ancillary area)	Actual Lobby area (FOR REFF.)	Lobby area (Ancillary area)	LIFT SHAFT (Ancillary area)	Total Ancillary area	Total Nos. of units
	1	2	3	4	5	6	7	8	9	10	11	12		13	14	15	16
								6+9+10+11 +12+13								7+9+11+12+ 13+14	
Area details	86.002	86.002	86.002	86.002	49.658		7.440	419.595	11.250	351.448	103.180	2.408	4.631	4.631	8.678		
Ground/Stilt Floor					49.658	49.658		419.595	11.250	351.448		2.408	4.631	4.631		18.269	0
First Floor	86.002	86.002	86.002	86.002	41.278	385.266	7.440		11.250			2.408	4.631	4.631	8.678	34.407	4
Second Floor	86.002	86.002	86.002	86.002	41.278	385.266	7.440		11.250			2.408	4.631	4.631	8.678	34.407	4
Third Floor	86.002	86.002	86.002	86.002	41.278	385.266	7.440		11.250			2.408	4.631	4.631	8.678	34.407	4
Fourth Floor	86.002	86.002	86.002	86.002	41.278	385.266	7.440		11.250			2.408	4.631	4.631	8.678	34.407	4
Fifth Floor	86.002	86.002	86.002	86.002	41.278	385.266	7.440		11.250			2.408	4.631	4.631	8.678	34.407	4
Sixth Floor	86.002	86.002	86.002	86.002	41.278	385.266	7.440		11.250			2.408	4.631	4.631	8.678	34.407	4
Seventh Floor	86.002	86.002	86.002	86.002	41.278	385.266	7.440		11.250			2.408	4.631	4.631	8.678	34.407	4
Eighth Floor	86.002	86.002	86.002	86.002	41.278	385.266	7.440		11.250			2.408	4.631	4.631	8.678	34.407	4
Ninth Floor	86.002	86.002	86.002	86.002	41.278	385.266	7.440		11.250			2.408	4.631	4.631	8.678	34.407	4
Tenth Floor	86.002	86.002	86.002	86.002	41.278	385.266	7.440		11.250			2.408	4.631	4.631	8.678	34.407	4
Eleventh Floor	86.002	86.002	86.002	86.002	41.278	385.266	7.440		11.250			2.408	4.631	4.631	8.678	34.407	4
Twelfth Floor	86.002	86.002	86.002	86.002	41.278	385.266	7.440		11.250			2.408	4.631	4.631	8.678	34.407	4
Thirteenth Floor	86.002	86.002	86.002	86.002	41.278	385.266	7.440		11.250			2.408	4.631	4.631	8.678	34.407	4
Fourteenth Floor	86.002	86.002	86.002	86.002	41.278	385.266	7.440		11.250			2.408	4.631	4.631	8.678	34.407	4
Fifteenth Floor	86.002	86.002	86.002	86.002	41.278	385.266	7.440		11.250			2.408	4.631	4.631	8.678	34.407	4
M/R, mumty											103.18					103.180	
Total						**5329.148**		**419.595**		**351.448**						**637.567**	**60**

OTS = OPEN TO SKY

PROJECT TITLE

PROPOSED GROUP HOUSING AT PLOT NO.-GH-07,SECTOR-SPORT CITY, GREATER NOIDA.FOR - SEIKOM INFRACOM PVT LTD

DRAWING TITLE:-

TYPICAL FLOOR, TERRACE FLOOR PLAN & AREA CHART (TOWER- G,H,I & J) (S +15)

DRG NO. S-11

SCALE	1:100
DATE	20140617
DEALT	
JOB NO.	\\Comp7\D\SUPERCITY-8(SHIFTED TO COMP10-D-DATA)\20140616_SUBMISSION 3.5

DEEPAK MEHTA & ASSOCIATES
ARCHITECTS, PLANNERS, VALUERS, LANDSCAPE & INTERIORS
PLOT NO. 16 ABHISHEK PLAZA L.S.C. MAYUR VIHAR PH II
DELHI 110091 INDIA PH: 01155272180, 01122770180
Email-deepakmehta1962@gmail.com

Architect Deepak Mehta
COA
Plot No. 16 A
Mayur Vihar Ph. II, Delhi-91

ARCHITECT'S SIGN

For SEIKOM INFRACOM PVT. LTD.
Authorised Signatory

OWNER'S SIGN