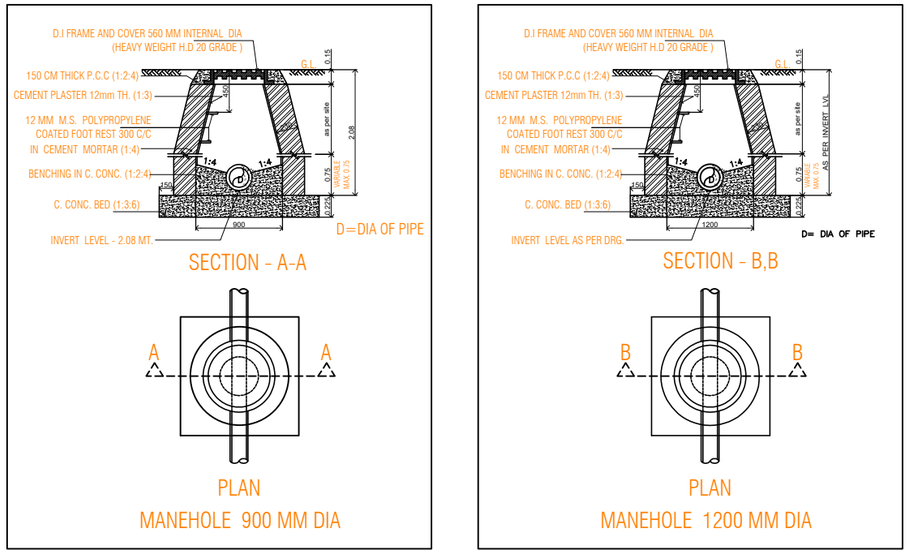
D.I FRAME AND COVER 560 MM INTERNAL DIA
(HEAVY WEIGHT H.D 20 GRADE)
150 CM THICK P.C.C (1:2:4)
CEMENT PLASTER 12mm TH. (1:3)
12 MM M.S. POLYPROPYLENE
COATED FOOT REST 300 C/C
IN CEMENT MORTAR (1:4)
BENCHING IN C. CONC. (1:2:4)
C. CONC. BED (1:3:6)
INVERT LEVEL - 2.08 MT.
D=DIA OF PIPE
SECTION - A-A
PLAN
MANEHOLE 900 MM DIA
D.I FRAME AND COVER 560 MM INTERNAL DIA
(HEAVY WEIGHT H.D 20 GRADE)
150 CM THICK P.C.C (1:2:4)
CEMENT PLASTER 12mm TH. (1:3)
12 MM M.S. POLYPROPYLENE
COATED FOOT REST 300 C/C
IN CEMENT MORTAR (1:4)
BENCHING IN C. CONC. (1:2:4)
C. CONC. BED (1:3:6)
INVERT LEVEL AS PER DRG.
D= DIA OF PIPE
SECTION - B,B
PLAN
MANEHOLE 1200 MM DIA

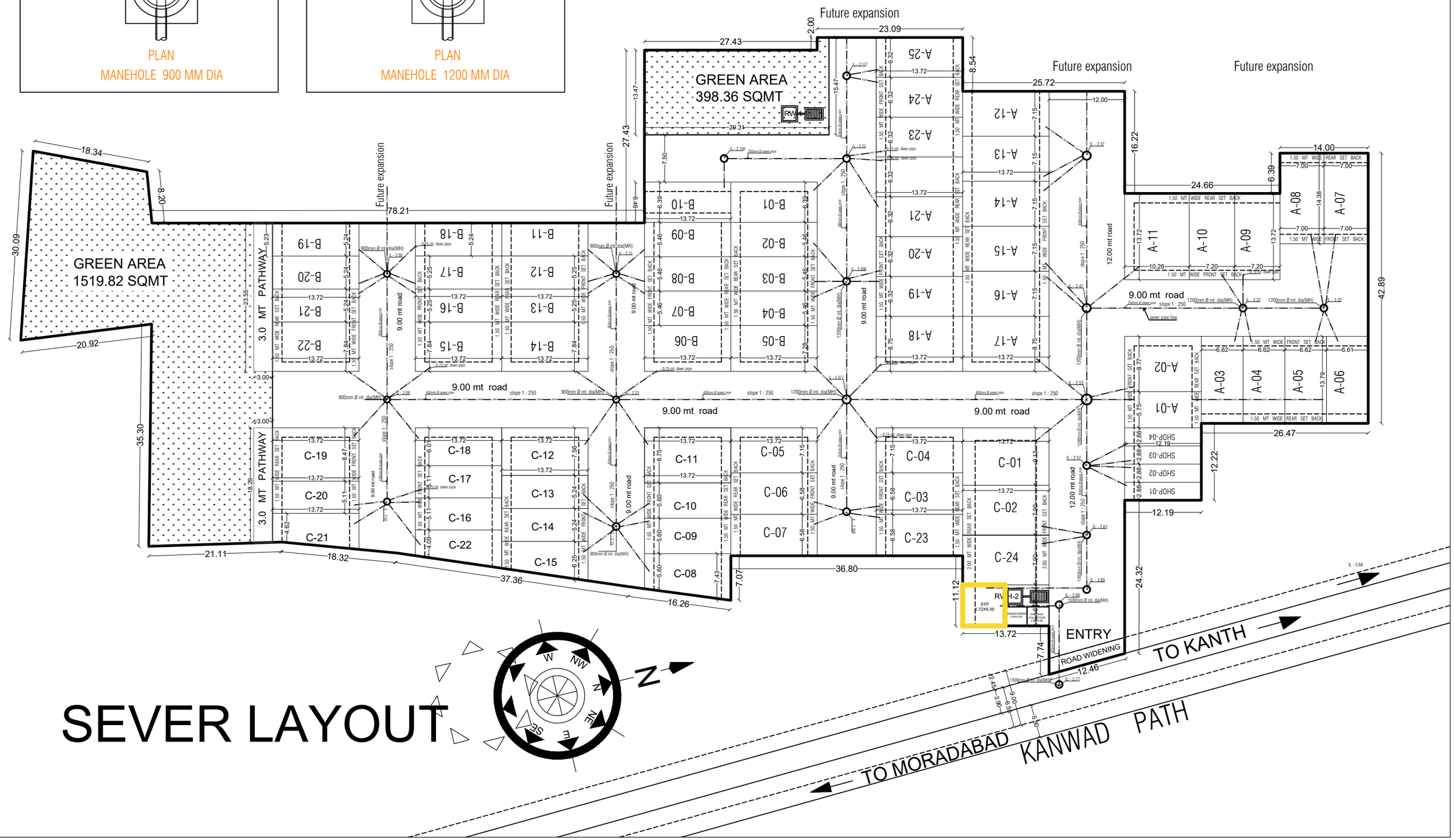
GREEN AREA
398.36 SQMT
GREEN AREA
1519.82 SQMT
Future expansion
Future expansion
Future expansion
Future expansion
Future expansion
3.0 MT PATHWAY
3.0 MT PATHWAY
9.00 mt road
9.00 mt road
9.00 mt road
9.00 mt road
12.00 mt road
12.00 mt road
ENTRY
ROAD WIDENING
TO KANTH
TO MORADABAD
KANWAD PATH
SEVER LAYOUT

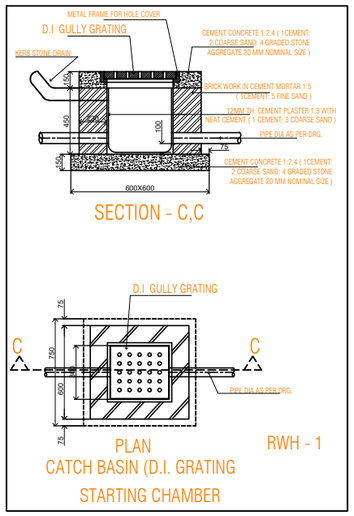

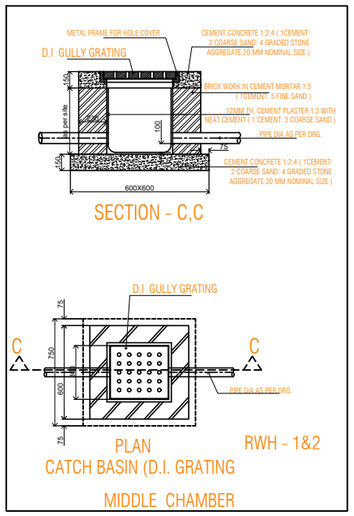

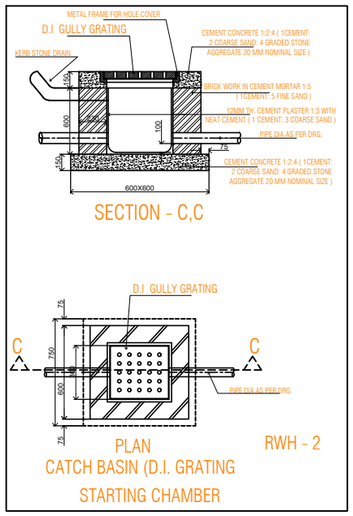

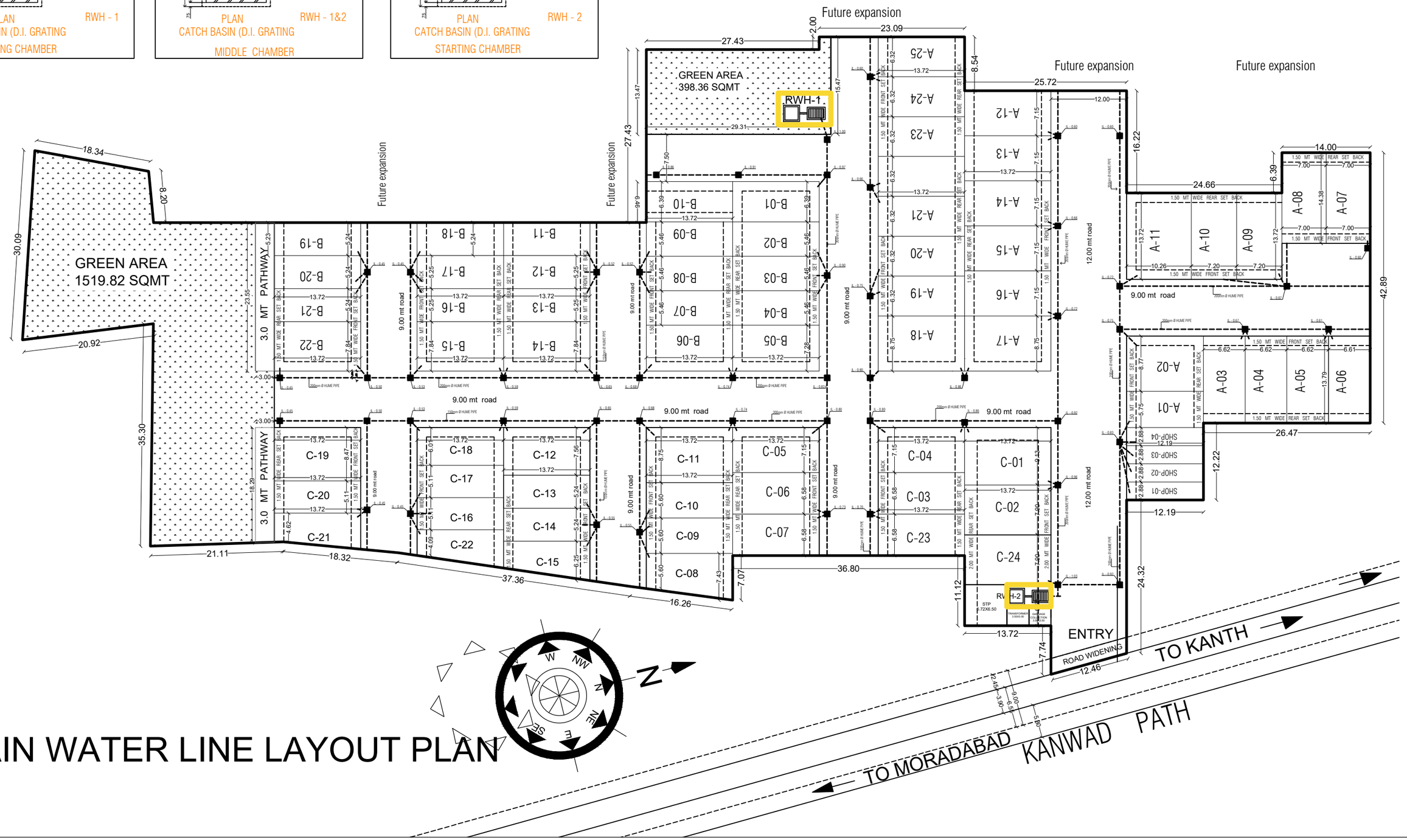

RAIN WATER LINE LAYOUT PLAN